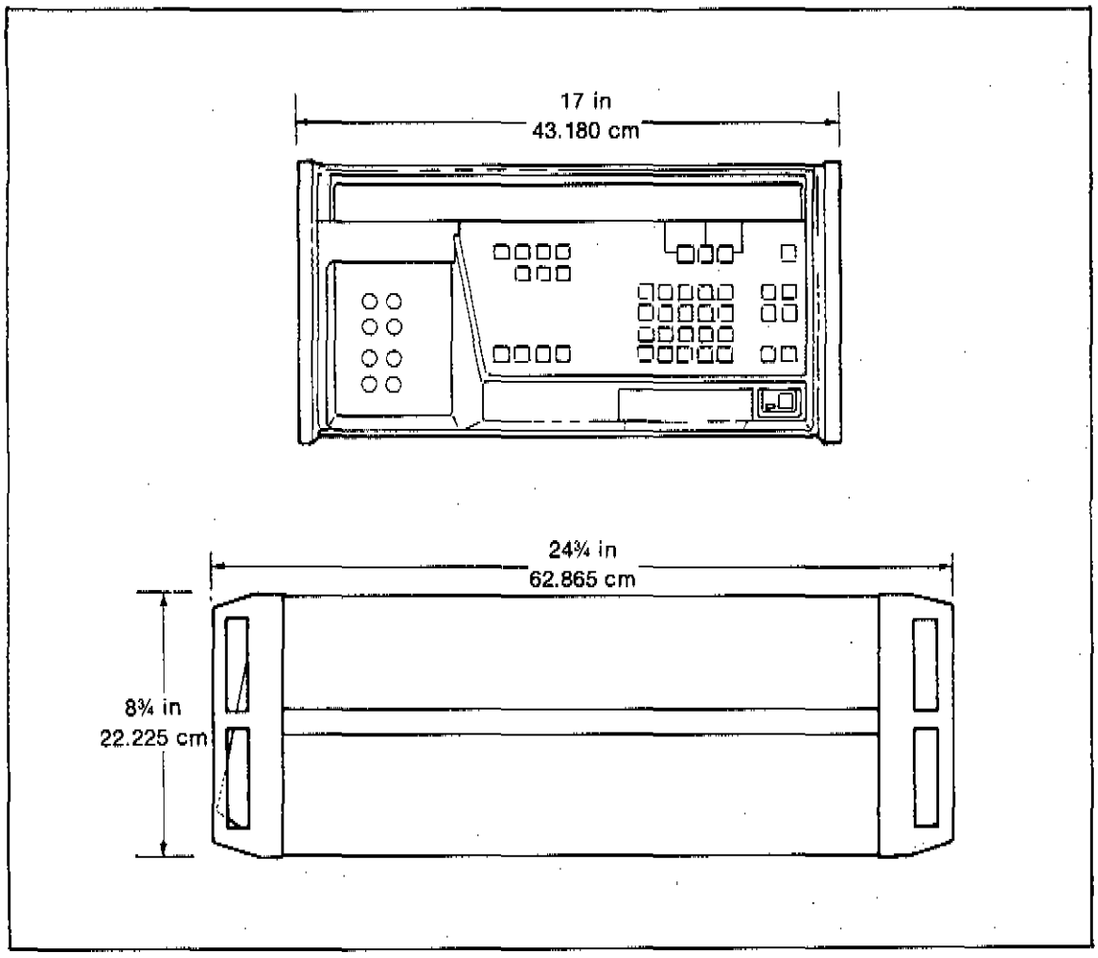

Figure 1-1. Outline Dimension Drawing

Table 1-2. General Specifications

Specifications apply to 5440B and 5442A unless otherwise noted.

Output Voltage: 0 to 1100V
Output Current: (see resolution specification)

5440B:
Output Uncertainty Compared to Calibration Standards, ±5°C

RANGE	UNCERTAINTY SPECIFICATION: ±(PPM OF OUTPUT + MICROVOLTS)			
	30 DAYS	90 DAYS	180 DAYS	1 YEAR
0V to 11V	1.5 + 5 μV	2.0 + 5 μV	2.5 + 5 μV	3.5 + 5 μV
11V to 22V	1.5 + 8 μV	2.0 + 8 μV	2.5 + 8 μV	3.5 + 8 μV
22V to 275V	2.5 + 100 μV	3.5 + 100 μV	4.5 + 100 μV	6.0 + 100 μV
275V to 1100V	2.5 + 400 μV	3.5 + 400 μV	4.5 + 400 μV	6.0 + 400 μV
DIVIDED OUTPUT				
0-220 mV	4 + 0.5 μV	5 + 0.5 μV	6.5 + 0.5 μV	10 + 0.5 μV
0.22-2.2V	3 + 1 μV	4.5 + 1.0 μV	6 + 1.0 μV	8 + 1.0 μV

Table 1-2. General Specifications (cont)

5442A:

Output Uncertainty Compared to Calibration Standards, ±5°C

RANGE	UNCERTAINTY SPECIFICATION: ±(PPM OF OUTPUT + MICROVOLTS)			
	30 DAYS	90 DAYS	180 DAYS	1 YEAR
0V to 11V	2.5 + 5 μV	3.0 + 5 μV	4.5 + 5 μV	6.5 + 5 μV
11V to 22V	2.5 + 8 μV	3.0 + 8 μV	4.5 + 8 μV	6.5 + 8 μV
22V to 275V	3.0 + 100 μV	3.5 + 100 μV	5.0 + 100 μV	7.0 + 100 μV
275V to 1100V	3.0 + 400 μV	4.0 + 400 μV	5.5 + 400 μV	8.0 + 400 μV
DIVIDED OUTPUT				
0-220 mV	6 + 0.5 μV	7 + 0.5 μV	9 + 0.5 μV	12 + 0.5 μV
0.22-2.2V	4 + 1 μV	6 + 1.0 μV	8 + 1.0 μV	11 + 1.0 μV

Uncertainty of Calibration Standards (Fluke 732A and 752A) Compared to National Standards

RANGE	UNCERTAINTY OF STANDARDS
0V to 11V	1.5 PPM
11V to 22V	1.5 PPM
22V to 275V	1.7 PPM
275V to 1100V	2.0 PPM
0V to 220 mV	4.0 PPM
0.22 to 2.2V	2.0 PPM

Output Uncertainty Compared to Natonal Standards

The output uncertainty compared to national standards for the 5440B and 5442A are defined as the algebraic sum for each range of the output uncertainty compared to national standards. The specifications for uncertainty of calibration standards listed above are those for the Fluke 732A and Fluke 752A. If other standards are used, the uncertainty of those standards must be substituted.

Output Stability

Specifications apply for initial stabilizations of two hours, constant ambient temperature of ±1°C, constant line voltage, constant load, and measurement bandwidth of 0.1 Hz to 1 Hz.

RANGE	±(PPM OF SETTING + FLOOR)		
	10 MINUTES	24 HOURS	30 DAYS*
0V to 11V	0.2 +2 μV	0.3 + 3 μV	0.5 + 3 μV
11V to 22V	0.2 + 3 μV	0.4 + 4 μV	0.5 + 4.5 μV
22V to 275V	0.3 + 40 μV	0.3 + 50 μV	1.0 + 60 μV
275V to 1100V	0.3 + 200 μV	0.3 + 200 μV	1.0 + 300 μV
DIVIDED OUTPUT			
0 mV to 220 mV	0.5 + 0.2 μV	0.5 + 0.2 μV	2 + 0.3 μV
0.22V to 2.2V	0.5 + 0.2 μV	0.5 + 0.5 μV	2 + 0.7 μV

*For best results, use internal calibration for periods exceeding one day.

Table 1-2. General Specifications (cont)

Temperature Coefficient of Output

These specifications apply for ambient temperatures outside the ±5°C range of the uncertainty specifications listed earlier.

RANGE	±(PPM OF SETTING) PER °C			
	0-10°C	10-30°C	30-40°C	40-50°C
0V to 11V	0.15 ppm	0.1 ppm	0.4 ppm	1.0 ppm
11V to 22V	0.15 ppm	0.1 ppm	0.4 ppm	1.0 ppm
22V to 275V	0.2 ppm	0.2 ppm	0.6 ppm	1.5 ppm
275V to 1100V	0.2 ppm	0.2 ppm	1.0 ppm	1.5 ppm
DIVIDED OUTPUT				
0-220 mV	0.5 ppm	0.5 ppm	0.5 ppm	1.2 ppm
0.22-2.2V	0.5 ppm	0.5 ppm	0.5 ppm	1.2 ppm

Linearity

These specifications apply for the ambient temperature range of 15°C to 30°C within ±5°C of the external calibration temperature.

RANGE	±PPM OF OUTPUT + MICROVOLTS)
0 mV to 220 mV	0.5 ppm + 0.2 μV
0.22V to 2.2V	0.7 ppm + 0.3 μV
0V to 11V	0.5 ppm + 1.5 μV
11V to 22V	0.5 ppm
22V to 275V	0.5 ppm + 40 μV
275V to 1110V	1.0 ppm

RESOLUTION

RANGE	RESOLUTION	MAXIMUM SETTING	MAXIMUM LOAD OR OUTPUT RESISTANCE
0V to 11V	1 μV	11.000000V	60 mA
11V to 22V	1 μV	22.000000V	60 mA
22V to 275V	10 μV	275.000000V	25 mA
275V to 1100V	100 μV	1100.0000V	25 mA
DIVIDED OUTPUT			
0 to 220 mV	0.01 μV	220.00000 mV	495Ω
0.22V to 2.2V	0.1 μV	2.2000000V	450Ω

OUTPUT NOISE

RANGE	BANDWIDTH	
	0.1 HZ TO 10 HZ	10 HZ TO 10 KHZ
0 mV to 220 mV	0.1 μV	5 μV
0.22V to 2.2V	0.2 μV	15 μV
0V to 11V	1.5 μV	30 μV
11V to 22V	3.0 μV	50 μV
22V to 275V	35 μV	150 μV
275V to 1100V	100 μV	300 μV

Table 1-2. General Specifications (cont)

Common Mode Rejection

Greater than 140 dB for frequencies from dc to 400 Hz.

Output Settling Time

Time to settle within a given uncertainty band of final value, for a change in programmed output within a given range.

RANGE	±PARTS PER MILLION OF CHANGE*		
	3 SECONDS	5 SECONDS	10 SECONDS
0 mV to 220 mV, 0.22V to 2.2V, 0V to 11V, and 11V to 22V	7 ppm	2 ppm	0.5 ppm
22V to 275V 275V to 1110V			3 ppm

*Add 0.5 seconds for any change in range up to 22V, 1.0 second for a change from 22V up, and 0.5 seconds for a change from STBY to OPER.

Line Power Requirements

NOMINAL SETTING	VOLTAGE LIMITS	FUSE	TYPICAL POWER
100V	90-110V	2A/250V	84 watts when in standby at nominal line, 145 watts when in 1100V range 25 mA output and high line
110V	99-121V	2A/250V	
115V	103.5-126.5V	2A/250V	
120V	108-132V	2A/250V	
200V	180-220V	1A/250V	
220V	198-242V	1A/250V	
230V	207-253V	1A/250V	
240V	216-264V	1A/250V	

Line Regulation

Less than ±0.1 ppm of range for a line voltage change ±10% of nominal.

Load Regulation

Less than ±0.1 ppm change of output for change from no-load to full-load or from full-load to no-load for output load impedances greater than 80 ohms.

Table 1-3. Physical and Environmental Specifications

Temperature and Humidity

CONDITION	TEMPERATURE	% RELATIVE HUMIDITY (NON-CONDENSING)
Non-Operating	-40°C to +75°C	Not controlled
	0°C to +50°C	≤95% ±5%
Operating	0 to 30°C	≤95% ±5% [1]
	+30 to +40°C	≤75% ±5%
	+40 to +50°C [2]	≤45% ±5%

Notes: [1] Accuracy degradation above 80% R.H.
[2] Instrument accuracy is degraded above 40°C due to loss of oven regulation.

Altitude
Non-Operating 0-12,200m (40,000 feet)
Operating 0-3,050m (10,000 feet)

Vibration

FREQUENCY	FORCE FREQUENCY	DOUBLE AMPLITUDE
5-15 Hz	0.7G at 15 Hz	0.06 in
15-25 Hz	1.3G at 25 Hz	0.04 in
25-55 Hz	3G at 55 Hz	0.02 in

Shock: 18 shocks, 20G, 1/2 sinewaves.
Size: 61cm L x 43cm W x 24cm H (24.0in L x 17.0in W x 8.75in H).
Weight: 30.2 kg (66.4 lb)
Warranty: 1 year, parts and labor (see specific warranty policy).
Compliance with External Standards
ANSI C39.5 Dec 1980
IEC 348 Second Edition 1978

EMI/RFI Review Standards
FCC Rules Part 15, Subpart J
VDE 0871
MIL STD 461B

EMI/RFI Conducted Emissions
VDE 0871
FCC Part 15 J Class
CISPR 11

Radiated EMI/RFI Emissions
Meets or exceeds all VDE and FCC requirements.